FINGERPRINT TIME ATTENDANCE

Built-in Li-Battery

Li Battery

3'TFT high-definition graphical interface

Reads fingerprint and/or PINS

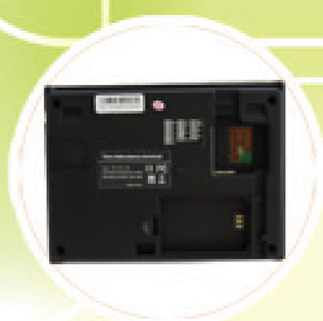

IN01-A with access control connection

Built-in Wi-Fior GPRS function(optional)

- Composite algorithm system with high speed operating.
- Embedded LINUX system, easy to integrate into various system.
- Standalone or network environment. 24 hours continuous operation available.
- Saves data during power outage.
- Built-in battery backup provides approx. 4-5 hours continuous operation.

IN01/IN01-A

SKETCH DIAGRAM

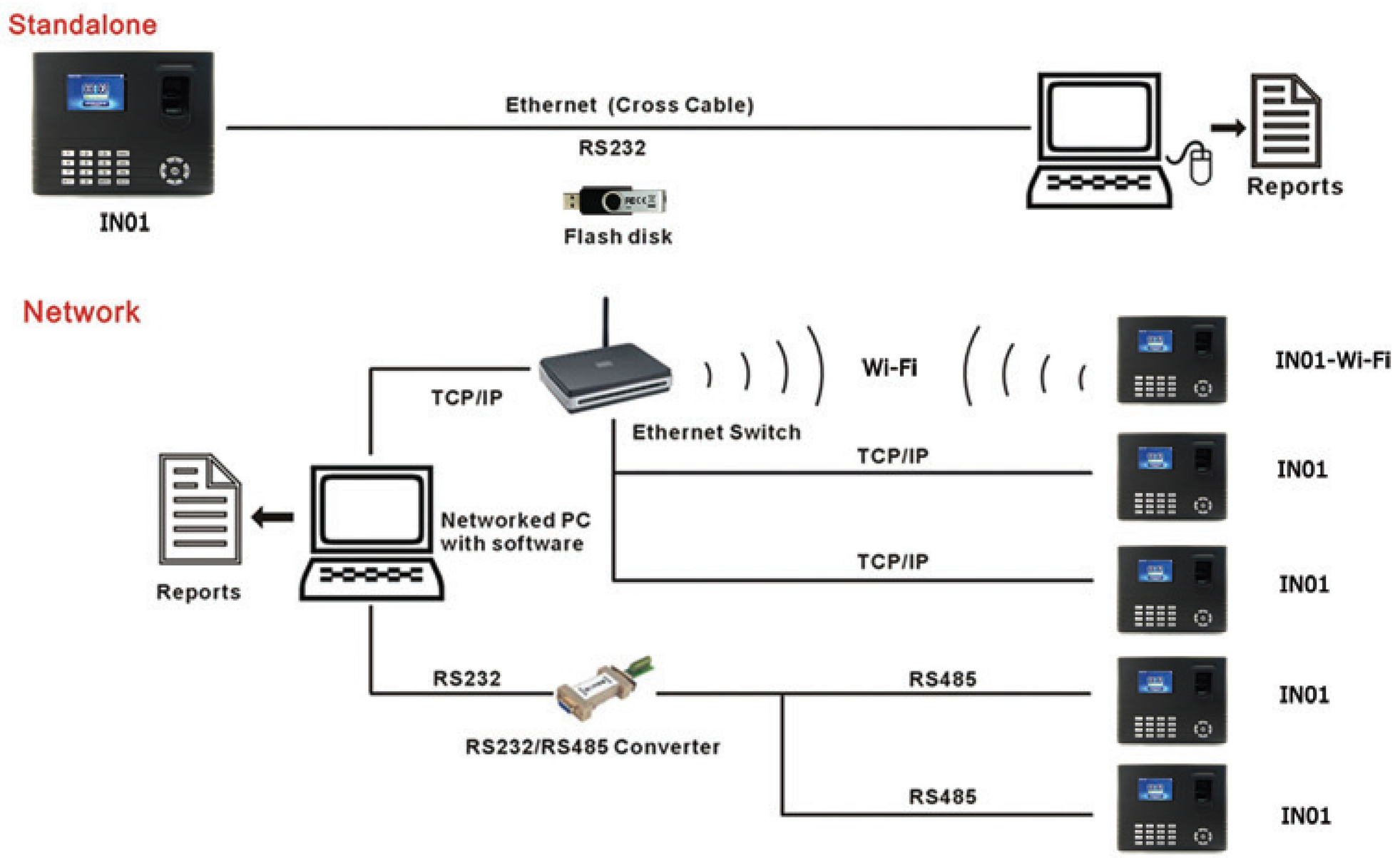

SPECIFICATION IN01/IN01-A

LCD Display	**Language**
3" TFT high-definition graphical interface	Multi language, English, French, Spanish, Arabic, Turkish, Portuguese, Czech, Hebrew, Slavic, Vietnamese etc., for more than 40 languages can be selected
Speaker	
Voice prompt (language can be selected)	
Capacity	**Environment**
Fingerprint: 3,000 Logs: 100,000	Operation temperature: 0°C-45°C Operation humidity: 20%-80%
Verification	**Power Supply**
Verification speed (1:1) ≤ 0.5s	110/220VAC ~ 12VDC/1.5A
Identification	**Package info.**
FRR ≤ 0.01% FAR ≤ 0.0001%	Machine size: 210(L)*157(H)*50(D)mm Unit packing: 270*235*90mm Real weight: 1kg Gross weight: 1.5kg
Communications	
TCP/IP, RS232/485, USB Host/client	
Attendance Status	**Function Support**
Check in/out, Break in/out, OT in/out	Work code, DLST, Auto-status, T9 input, 9 dight user ID, Scheduled-bell, SMS, Self-service Query
Access control (IN01-A)	**Customize Function**
Built-in replay, support 99 time zones, 5 groups, 10 door-opening combinations	Photo-ID, Webserver, Printer output, external bell, 14 dight user ID, ID reader, HID reader, Mifare reader
Alarml (IN01-A)	
Dismantlement alarm, break-in alarm, duress alarm	